3.75 GHz Band Pass Filter

- 3300 - 4200 MHz pass band
- Low insertion loss and high rejection
- 4 W max. CW power capacity
- SMD, EIA 0603 case size
- RoHS compliant

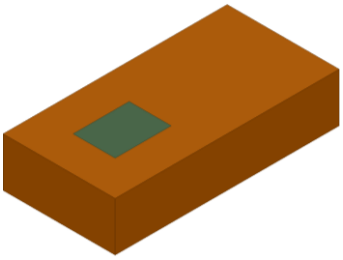

General Specifications[1] [2]

Insertion Loss (dB)	3300 - 4200 MHz	1.35 Typ.		1.9 Max.
Return Loss (dB)	3300 - 4200 MHz	13 Typ.	10 Min.	
Attenuation (dB)	100 - 2570 MHz	47 Typ.	35 Min.	
	2170 MHz	49 Typ.	40 Min.	
	2620 - 2690 MHz	28 Typ.	25 Min.	
	5150 - 5950 MHz	26 Typ.	20 Min.	
	6600 - 8400 MHz	35 Typ.	27 Min.	
	9900 - 12600 MHz	33 Typ.	27 Min.	

Maximum Ratings

Power Capacity (W)	4 Max. (CW)
Operating Temperature (°C)	-40 to +105
Recommended Storage Conditions post-installation (°C)	-40 to +105
Recommended Storage Conditions and Period for Unused T&R Product	45% - 75% RH +5 to +35 °C 18 Months Max.

[1] Typical value represents average measurement at 25°C. Min./Max. values represent measurements over specified operating temperature.
[2] General specifications measured on Johanson's evaluation board P/N 3750BP14D0900001CE1.

johansontechnology.com
4001 Calle Tecate • Camarillo, CA 93012, USA • +1.805.389.1166
2026 Johanson Technology, Inc. All Rights Reserved

Mechanical Dimensions

	Inches			Millimeters		
L	0.063	±	0.004	1.60	±	0.10
W	0.031	±	0.004	0.80	±	0.10
T	0.014		Max.	0.35		Max.
a	0.012	±	0.004	0.30	±	0.10
b	0.016	±	0.004	0.40	±	0.10
c	0.024	±	0.004	0.60	±	0.10
d	0.028	±	0.004	0.70	±	0.10

Bottom view

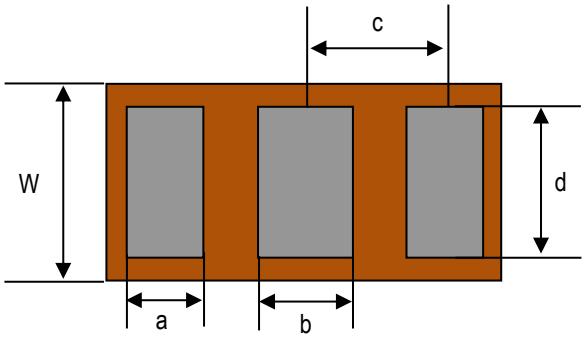

Side view

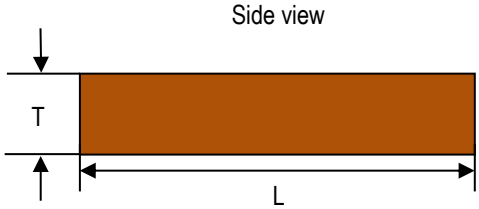

Top view

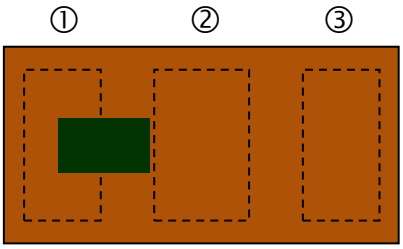

Terminal Configuration[3]

Pin Number	Function
1	INPUT/OUTPUT
2	GND
3	INPUT/OUTPUT

[3] The termination type is Nickel Tin. Go to: https://www.johansontechnology.com/ipcsoldering-profile for Typical Soldering Profile.

johansontechnology.com
4001 Calle Tecate • Camarillo, CA 93012, USA • +1.805.389.1166
2026 Johanson Technology, Inc. All Rights Reserved

Recommended Mounting Configuration

Note: Mount device with colored mark facing up.

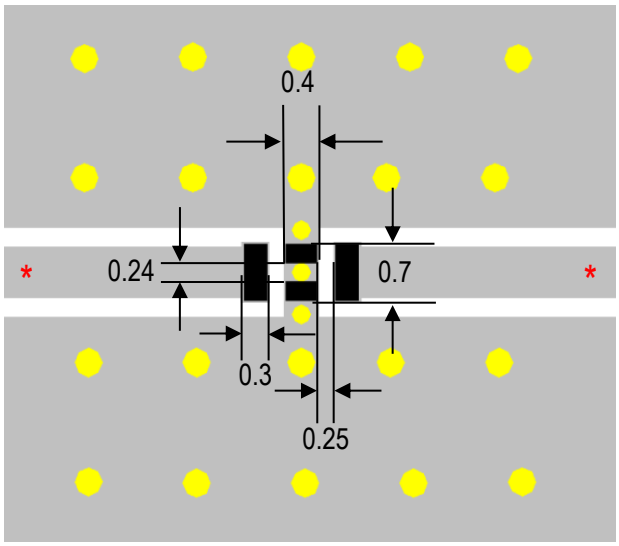

Units in mm

Solder Resist

Land

Through-hole (ϕ0.23, ϕ0.35)

* Transmission line width should be designed to match 50Ω characteristic impedance, depending on PCB material and thickness.

If you'd like the CAD PCB layout or have any questions,
contact our application engineers at https://www.johansontechnology.com/ask-a-question

Measuring Diagram

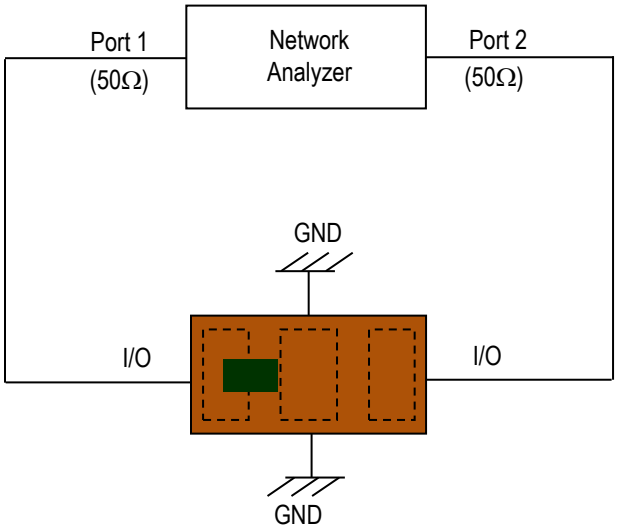

johansontechnology.com
4001 Calle Tecate • Camarillo, CA 93012, USA • +1.805.389.1166
2026 Johanson Technology, Inc. All Rights Reserved

RF Measurement (T = 25°C)

Insertion Loss, Return Loss

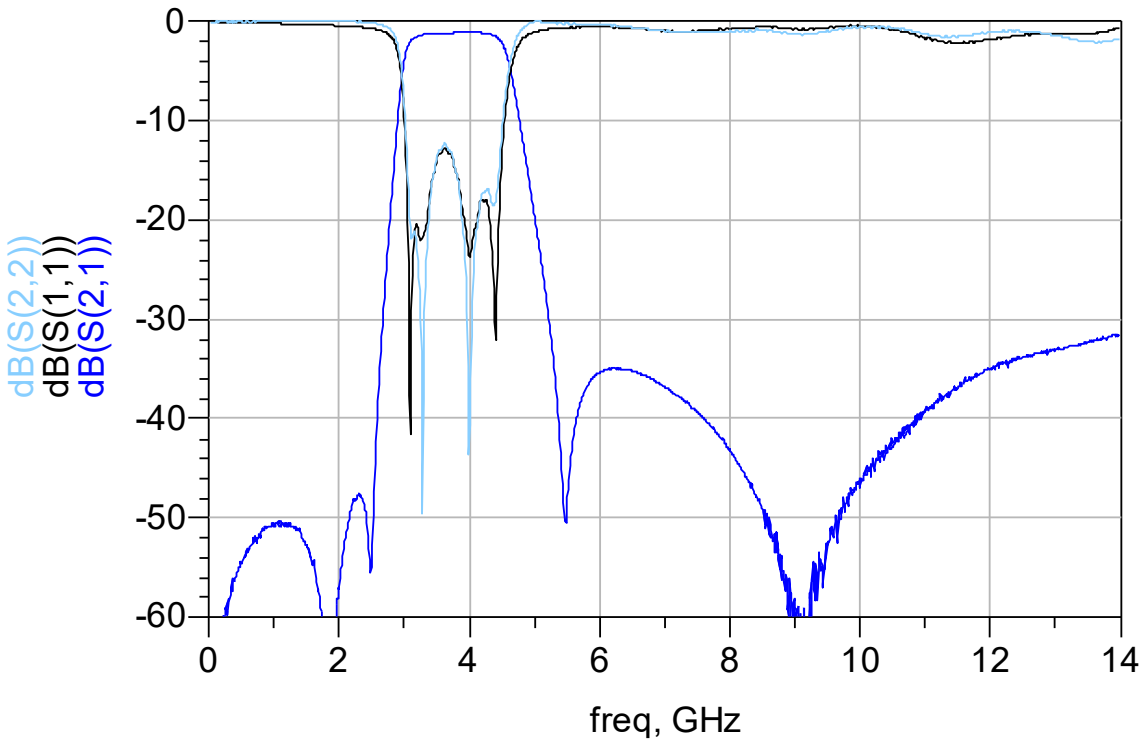

S-parameter and layout file available upon request. Please contact us at https://www.johansontechnology.com/ask-a-question

johansontechnology.com
4001 Calle Tecate • Camarillo, CA 93012, USA • +1.805.389.1166
2026 Johanson Technology, Inc. All Rights Reserved

Tape and Reel Specification (Units in mm)

Tape Dimensions

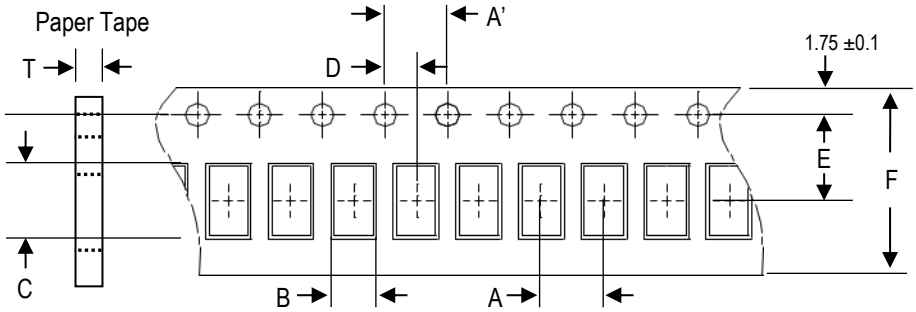

A	A'	B	C	D	E	F	T	Quantity/reel	Tape material
4.0 ±0.1	4.0 ±0.1	0.95 ±0.1	1.8 ±0.1	2.0 ±0.1	3.5 ±0.1	8.0 ±0.1	0.6 ±0.03	4,000pcs.	Paper

Reel Dimensions

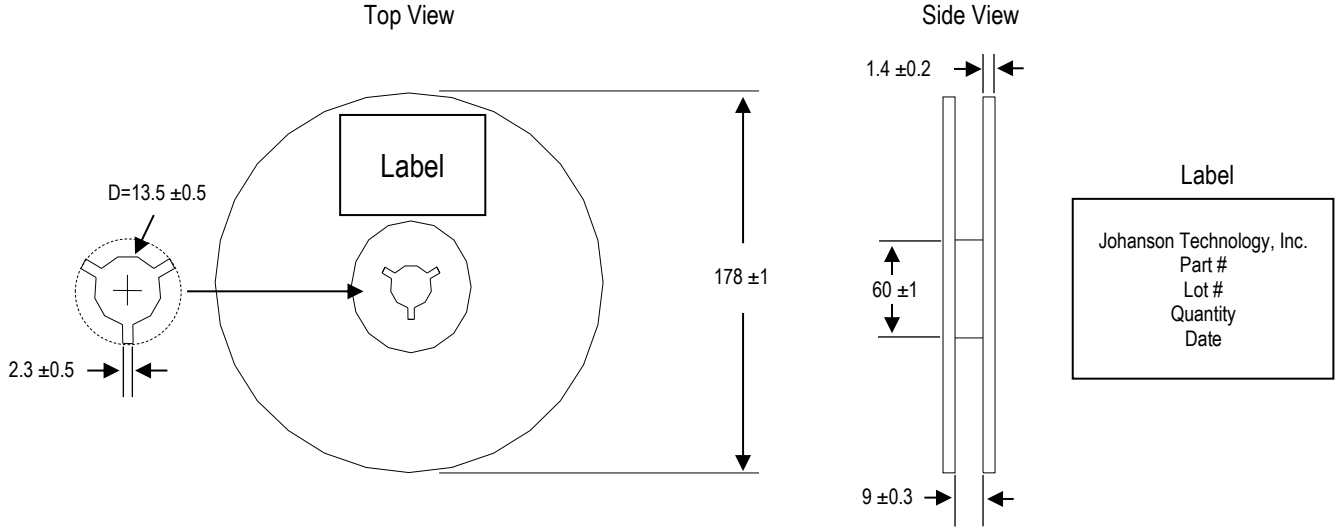

Leader and Trailer Dimensions

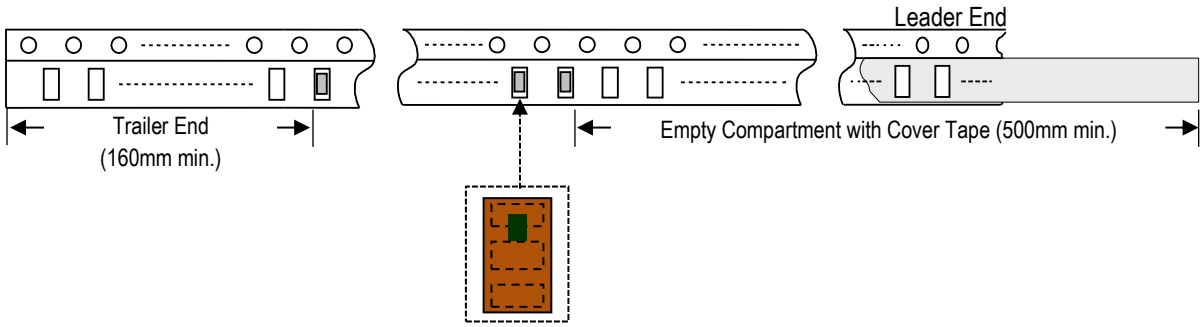

johansontechnology.com
4001 Calle Tecate • Camarillo, CA 93012, USA • +1.805.389.1166
2026 Johanson Technology, Inc. All Rights Reserved

Orderable Part Number

Packaging Style	Part Number	Termination
Bulk (loose pcs.)	3750BP14D0900001B	Nickel Tin
T & R (7" Reel Paper Tape)	3750BP14D0900001T (Qty: 4,000 pcs/reel)	
Evaluation Board with 2 SMA Connectors	3750BP14D0900001CE1	

Important Links

3750BP14D0900001T Product Page

More Band Pass Filters

Antenna Tuning, Optimization, and Validation Services

Soldering Information

MSL Information

Packaging Information

Recommended Storage Condition and Max Shelf Life

RoHS Compliance

Contact our application engineers for a PCB layout review.

Johanson Technology, Inc. reserves the right to make design changes without notice.
All sales are subject to Johanson Technology, Inc. terms and conditions.

johansontechnology.com
4001 Calle Tecate • Camarillo, CA 93012, USA • +1.805.389.1166
2026 Johanson Technology, Inc. All Rights Reserved