3.4 GHz RF 1:2 Wideband Balun

- 1800 - 5000MHz, 50:100 (1:2) Impedance Ratio
- Wireless communication systems, base stations, cellular, ISM, 5G
- SMD, EIA 0805
- RoHS compliant

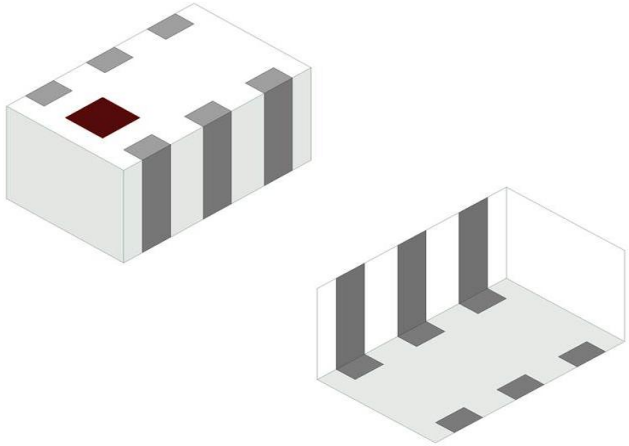

General Specifications[1] [2]

Passband Frequency (MHz)	**1800 – 5000**
Unbalanced Impedance (Ω)	50
Balanced Impedance (Ω)	100
Insertion Loss (dB)	0.8 Typ. (1.45 Max.)
Return Loss (dB)	16 Typ. (10 Min.)
Phase Difference (degrees)	180 ± 8 Typ. (180 ± 12 Max.)
Amplitude Difference (dB)	0.8 Typ. (1.3 Max.)
CMRR (dB)	23 Typ. (18 Min.)

Maximum Ratings

Power Capacity (W)	3 Max. (CW)
Operating Temperature (°C)	-40 to +125
Recommended Storage Conditions post-installation (°C)	-40 to +125
Recommended Storage Conditions and Period for Unused T&R Product	45% - 75% RH +5 to +35 °C 18 Months Max.

[1] Typical value represents average measurement at 25°C. Min./Max. values represent measurements over specified operating temperature.
[2] General specifications measured on Johanson's evaluation board P/N 3400BL15A0100001CE1.

johansontechnology.com
4001 Calle Tecate • Camarillo, CA 93012, USA • +1 805-389-1166
2026 Johanson Technology, Inc. All Rights Reserved

Mechanical Dimensions

	Inches			Millimeters		
L	0.079	±	0.004	2.00	±	0.10
W	0.049	±	0.004	1.25	±	0.10
T	0.037	±	0.004	0.95	±	0.10
a	0.012	±	0.004	0.30	±	0.10
b	0.008	±	0.004	0.20	±	0.10
c	0.012	+.004/-.008		0.30	+0.1/-0.2	
g	0.014	±	0.004	0.35	±	0.10
p	0.026	±	0.002	0.65	±	0.05

Bottom view

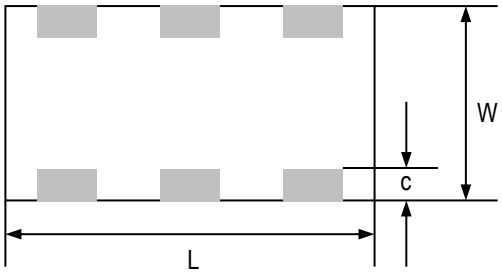

Side view

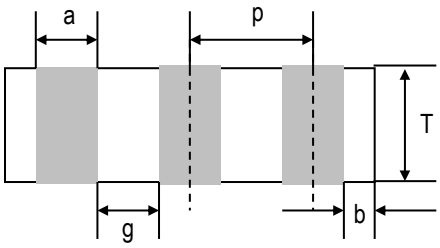

Terminal Configuration[3]

Pin Number	Function
1	Unbalanced Port (IN)
2	GND *or* (DC feed + RF GND)
3	Balanced Port (OUT1)
4	Balanced Port (OUT2)
5	GND
6	NC

Top view

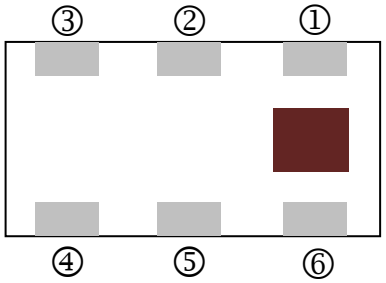

[3] The termination type is Nickel Tin. Go to: https://www.johansontechnology.com/tech-notes/typical-soldering-profile-ipc for Typical Soldering Profile.

johansontechnology.com
4001 Calle Tecate • Camarillo, CA 93012, USA • +1 805-389-1166
2026 Johanson Technology, Inc. All Rights Reserved

Recommended PCB Layout

Note: Mount device with colored mark facing up.

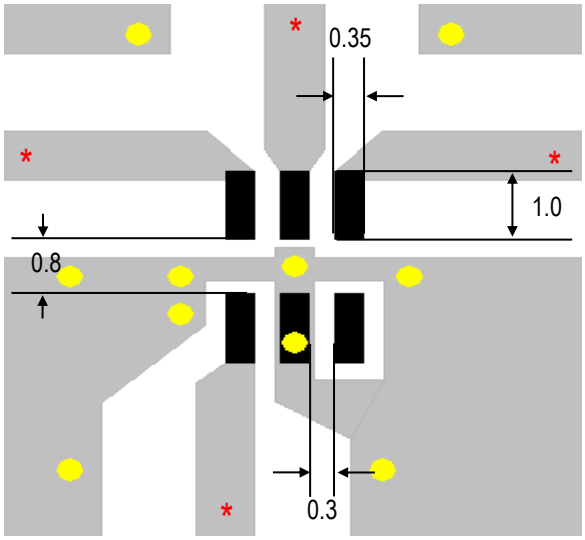

Units: mm

Solder Resist

Land

Through-hole (Φ 0.3)

* Transmission line width should be designed to match 50Ω characteristic impedance, depending on PCB material and thickness.

If you would like the full reference design package or have any questions,
contact our application engineers at https://www.johansontechnology.com/ask-a-question

Equivalent Internal Circuit[4 5 6]

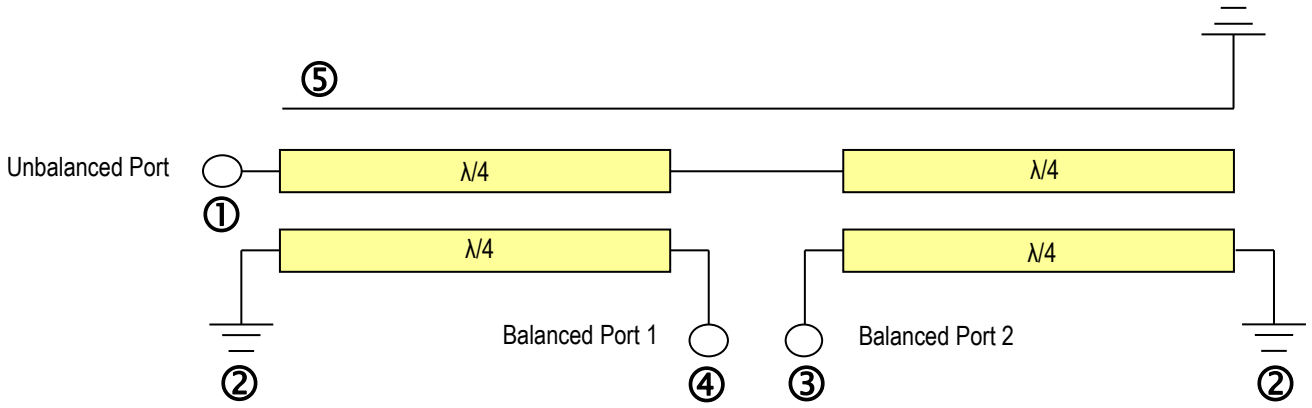

[4] Pin3 and Pin4 are DC connected to Pin2 (GND or DC feed) in the device but not DC connected to Pin5 (GND). Therefore, by-pass capacitors should be connected when feeding DC power from Pin2.

[5] Unbalanced port does not have a direct current path to GND.

[6] Use an RF capacitor to RF GND when using DC-Feed option. Contact us for best cap value for this.

johansontechnology.com
4001 Calle Tecate • Camarillo, CA 93012, USA • +1 805-389-1166
2026 Johanson Technology, Inc. All Rights Reserved

Measuring Diagram

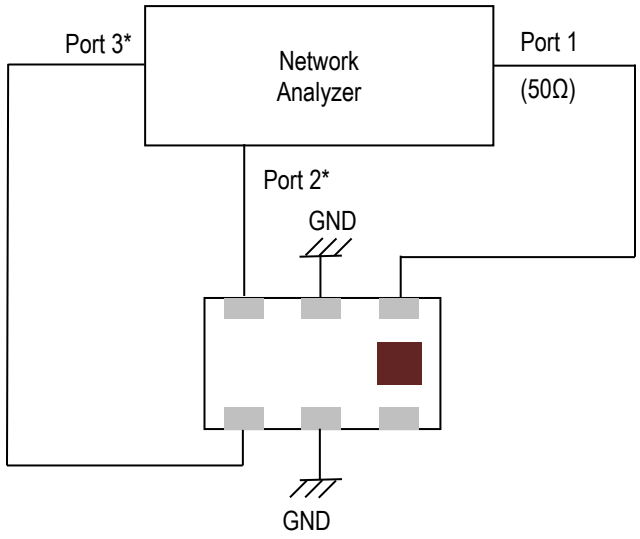

Port 1: Unbalanced Port

Ports 2 and 3: Balanced Port

Insertion Loss = S_{ds21}

Return Loss = S_{ss11}

Amplitude balance = dB(S(2,1)/S(3,1))

Phase balance = Phase(S(2,1)/S(3,1))

*Impedance for ports 2 and 3 = Balanced Impedance/2

johansontechnology.com
4001 Calle Tecate • Camarillo, CA 93012, USA • +1 805-389-1166
2026 Johanson Technology, Inc. All Rights Reserved

RF Measurement (T=25°C)

Insertion Loss and Return Loss

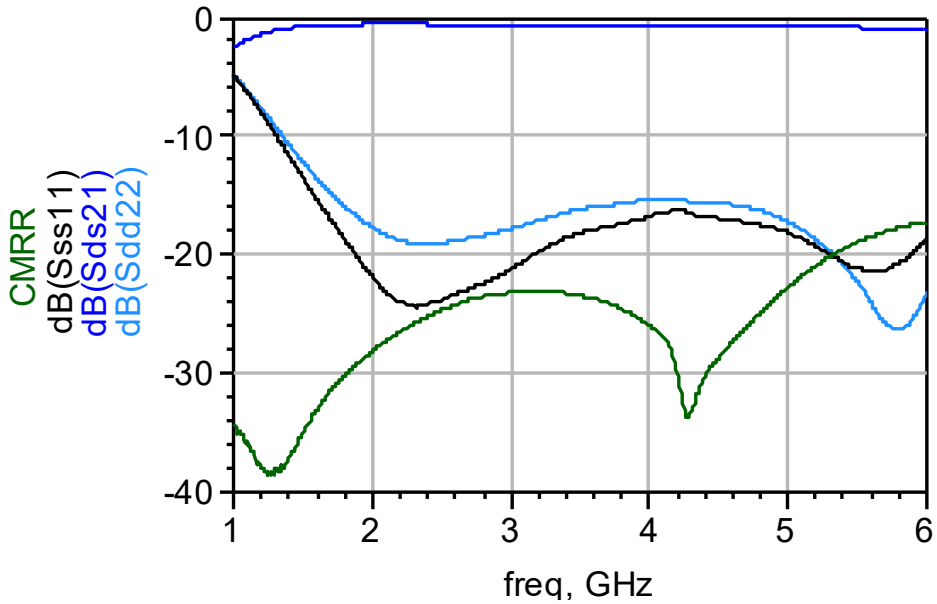

Phase Difference and Amplitude Difference

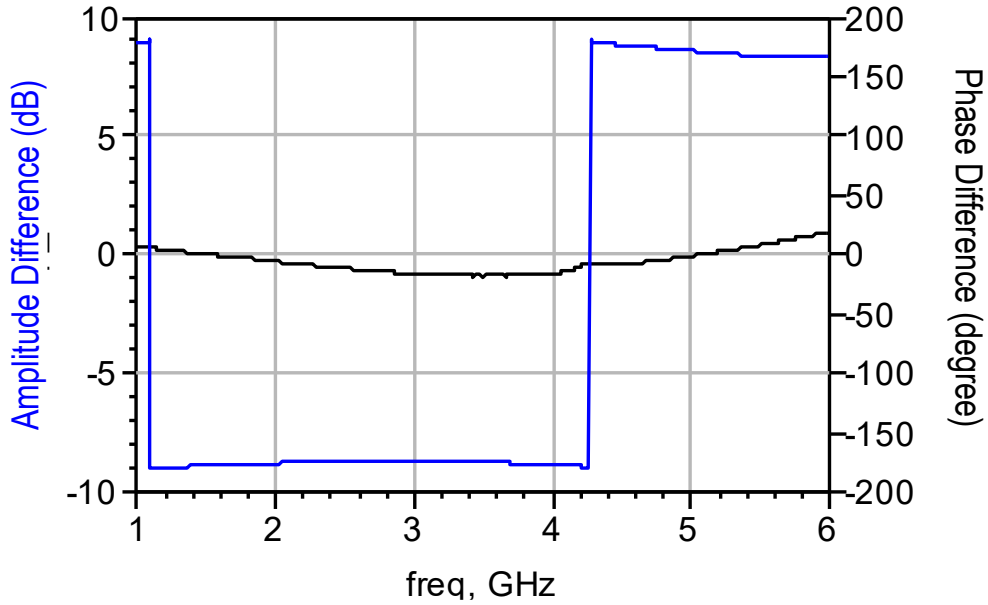

S-parameter and layout files available upon request. Please contact us at https://www.johansontechnology.com/ask-a-question

johansontechnology.com
4001 Calle Tecate • Camarillo, CA 93012, USA • +1 805-389-1166
2026 Johanson Technology, Inc. All Rights Reserved

Tape and Reel Specification (Units in mm)

Tape Dimensions

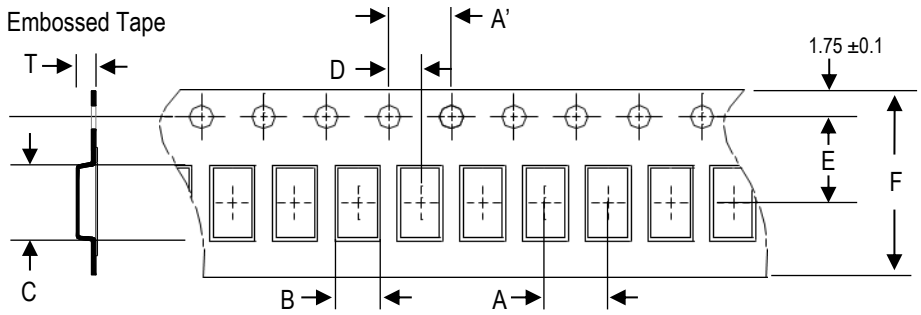

A	A'	B	C	D	E	F	T	Quantity/reel	Tape material
4.0 ±0.1	4.0 ±0.1	1.35 ±0.05	2.15 ±0.05	2.0 ±0.05	3.5 ±0.1	8.0 ±0.1	1.08 ±0.05	4,000 pcs.	Plastic (Embossed)

Reel Dimensions

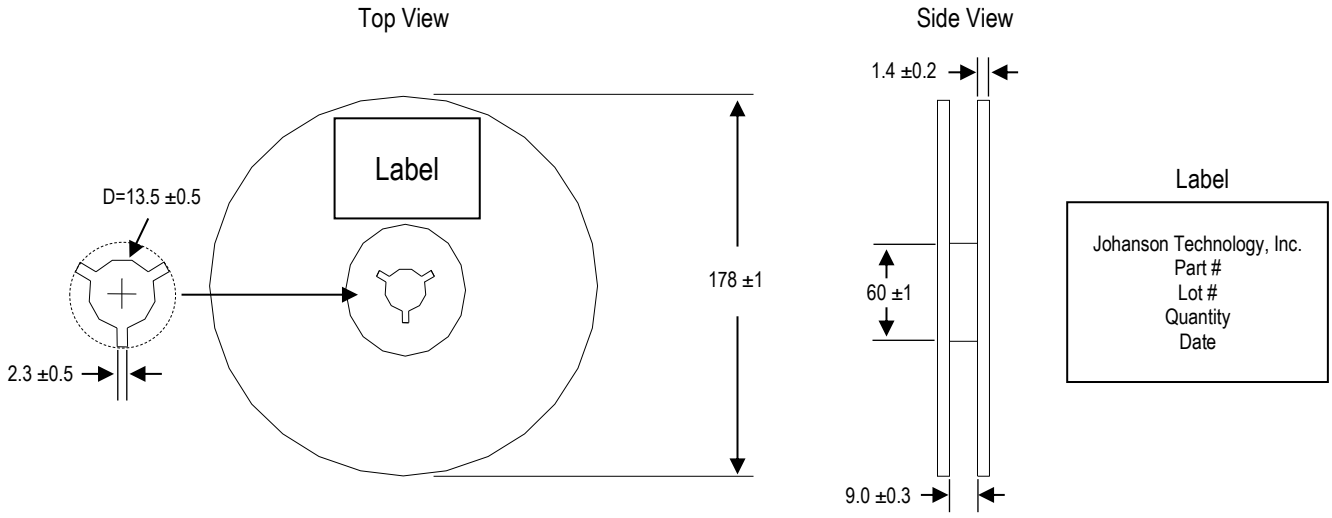

Leader and Trailer Dimensions

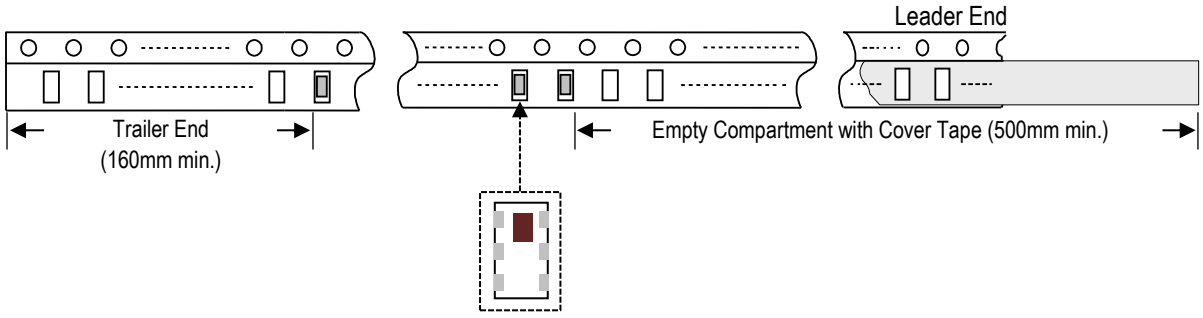

johansontechnology.com
4001 Calle Tecate • Camarillo, CA 93012, USA • +1 805-389-1166
2026 Johanson Technology, Inc. All Rights Reserved

Orderable Part Number

Packaging Style	Part Number	Termination
Bulk (loose pcs.)	3400BL15A0100001B	Nickel Tin
T & R (7" Reel Embossed Tape)	3400BL15A0100001E (Qty: 4,000 pcs./reel)	
Evaluation Board with 3 SMA Connectors	3400BL15A0100001CE1	

Important Links

3400BL15A0100001E Product Page

More RF Baluns

Antenna Tuning, Optimization, and Validation Services

Soldering Information

MSL Information

Packaging Information

Recommended Storage Condition and Max Shelf Life

RoHS Compliance

Johanson Technology, Inc. reserves the right to make design changes without notice.
All sales are subject to Johanson Technology, Inc. terms and conditions.

johansontechnology.com
4001 Calle Tecate • Camarillo, CA 93012, USA • +1 805-389-1166
2026 Johanson Technology, Inc. All Rights Reserved